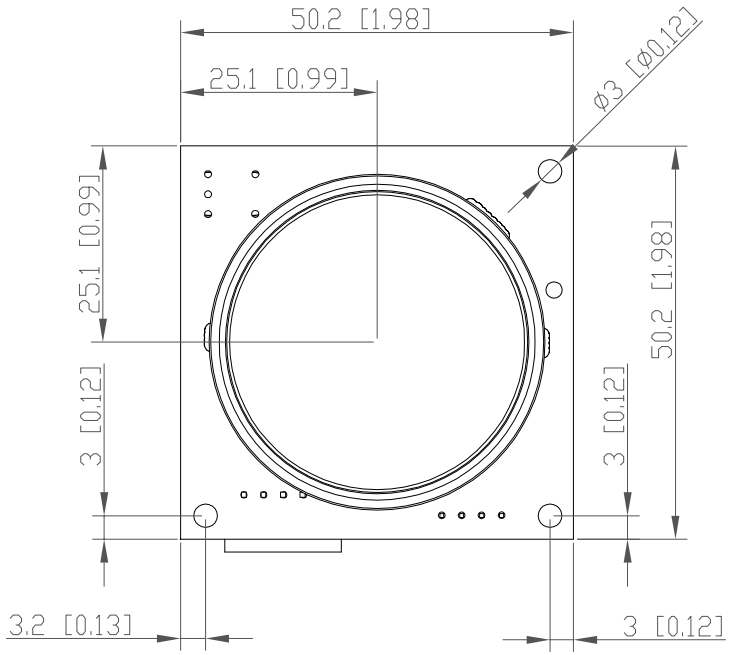

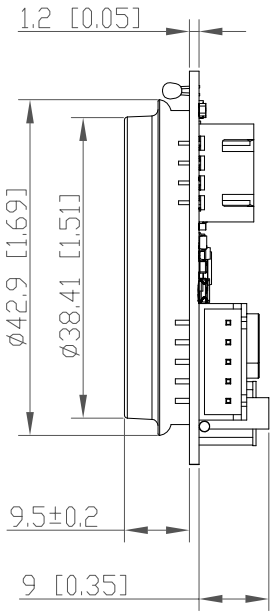

TOLERANCE		TITLE		H01产品图		深圳市电应普科技有限公司 Shenzhen Dianyingpu Technology Co., Ltd.		
0~10	±0.1	PART NO.						
≥10~30	±0.15	MATERIAL		FINISH		APPROVED BY	CHECKED BY	DRAWN BY
≥30~50	±0.2	VIEW	UNIT	SCALE	WEIGHT			陈凤杰
≥50~100	±0.3							
≥100~200	±0.5		mm/inches	1:1				2021/8/12